ROOM FINISH SCHEDULE

No	Name	Floor: Terrazzo	Floor: Ceramic Tile	Floor: Asphalt Tile	Floor: Concrete	Floor: Wood	Floor: See Remarks	Base: Terrazzo	Base: Wood	Base: Angle	Base: None	Base: See Remarks	Wainscot: Height	Wainscot: Ceramic Tile	Walls: None	Walls: See Remarks	Walls: Plaster	Walls: Face Brick	Walls: Marble	Walls: Block	Walls: Concrete	Walls: Acoustical Block	Walls: See Remarks	Ceiling: Height if Suspended	Ceiling: Plaster	Ceiling: Acoustical Tile	Ceiling: Exposed Conc.	Ceiling: Conc.	Ceiling: See Remarks	Remarks
1	TRANSFORMER VAULT				✓						✓				✓						✓							✓		
2	SECONDARY DIST. RM.				✓						✓				✓						✓							✓		
3	MECHANICAL ROOM				✓						✓				✓						✓							✓		
4	PIPE TUNNEL				✓						✓				✓						✓							✓		
5	STAIRS				✓						✓				✓						✓							✓		
100	CHAPLAINS OFFICE			✓					✓							✓		✓						9'-10½"	✓					
101	CHAPLAINS OFFICE			✓					✓							✓		✓						9'-10½"	✓					
102	CHAPLAINS OFFICE			✓					✓							✓		✓						9'-10½"	✓					
103	TOILET	✓									✓		4'-0"	✓				✓						9'-10½"	✓					
104	CLOSET			✓					✓							✓		✓						7'-6"	✓					SHELF - HANG ROD - 6 HOOKS DETAIL (5/A)
105	CLOSET			✓					✓							✓		✓						7'-6"	✓					SHELF - HANG ROD - 6 HOOKS DETAIL (5/A)
106	TOILET	✓									✓		4'-0"	✓				✓						9'-10½"	✓				✓	SKY LIGHT IN CEILING
107	CLOSET			✓					✓							✓		✓						7'-6"	✓					SHELF HANG ROD & HOOKS DETAIL (5/A)
108	TOILET	✓									✓		4'-0"	✓				✓						9'-10½"	✓					
109	CORRIDOR			✓					✓							✓		✓						9'-10½"	✓					
110	CORRIDOR			✓					✓							✓		✓						9'-10½"	✓					
111	TOILET	✓									✓		4'-0"	✓				✓						9'-10½"	✓					
112	CLOSET			✓					✓							✓		✓						7'-6"	✓					SHELF - HANG ROD & HOOKS (5/A)
113	UTILITY ROOM	✓									✓		4'-0"	✓				✓						7'-6	✓					1"x12" WOOD SHELF STEEL BRACKETS 4 HOOKS DETAIL (3/A)
114	TELEPHONE BOOTH			✓					✓						✓			✓						7'-6"	✓					
115	CLOSET			✓					✓						✓			✓						7'-6"	✓				✓	
116	TOILET	✓									✓		4'-0"	✓				✓						9'-10½"	✓					
117	DRESSING ROOM			✓					✓						✓			✓						9'-10½"	✓					
118	DRESSING ROOM			✓					✓						✓			✓						9'-10½"	✓					
119	STAGE STORAGE				✓				✓						✓					✓							✓			
120	STAIR TO MECH. R'M.						✓				✓				✓					✓							✓			CEMENT FILLED TREADS SEE DETAIL (3/A)
121	CLOSET			✓					✓						✓					✓				7'-6"	✓					
122	JANITOR'S CLOSET	✓									✓		4'-0"	✓						✓				7'-6"	✓					1"x12" WOOD SHELF & STEEL BRACKETS 4 HOOKS DETAIL (3/A)
123	STAGE					✓	✓	✓							✓					✓							✓			PART HARDWOOD PART SOFT WOOD FLOOR. SEE DWGS.
124	AUDITORIUM			✓						✓					✓		✓			✓			✓	VARIES	✓	✓				PLASTER PANELS AT SIDE WALLS. SPECTRA GLAZE AC. BLOCK.
125	LOBBY	✓						✓							✓			✓	✓					20'-2¾"		✓				
126	STAIR HALL	✓						✓							✓		✓								✓					TERRAZZO FILLED TREADS SEE DETAIL (3/A)
127	STORAGE ROOM			✓					✓						✓		✓						✓	8'-0"	✓					SHELVING AT ONE WALL
128	CLOAK ROOM			✓					✓						✓		✓							8'-0"	✓					
129	MENS TOILET	✓									✓					✓								9'-10½	✓					CER. TILE FL. & WALLS AT TOILET ROOM & VESTIBULE
130	JANITOR'S CLOSET	✓									✓		4'-0"	✓				✓						7'-6"	✓					1"x12" SHELF STEEL BRACKETS 4 HOOKS DETAIL (3/A)
131	PIPE SPACE			✓							✓				✓					✓							✓			
132	WOMENS TOILET	✓									✓					✓							✓	7'-10½"	✓					CERAMIC TILE WALLS, FLOOR TO CEILING.
133	REHEARSAL ROOM			✓					✓						✓			✓						7'-10½"		✓				
134	CORRIDOR	✓						✓							✓		✓	✓						7'-10½"		✓				
135	CONNECTING CORRIDOR	✓						✓							✓			✓						7'-10½"		✓				
136	RAMP	✓						✓							✓			✓						VARIES		✓				SEE DETAIL (1/A)
201	STORAGE			✓					✓						✓					✓							✓			
202	JANITOR'S CLOSET		✓								✓		4'-0"	✓						✓				7'-6"	✓					1"x12" WOOD SHELF - STEEL BRACKETS 4 HOOKS DETAIL (3/A)
203	CORRIDOR			✓					✓						✓					✓				8'-2¾"	✓					
204	GENERATOR ROOM			✓					✓						✓					✓				8'-2¾"	✓					
205	TOILET			✓					✓						✓					✓				8'-2¾"	✓					
206	PROJECTION ROOM			✓					✓						✓					✓				8'-2¾"	✓					
207	REWIND ROOM			✓					✓						✓					✓				8'-2¾"	✓					
208	CORRIDOR		✓						✓						✓					✓				8'-2¾"	✓					
209	MENS TOILET	✓									✓					✓							✓	8'-2¾"	✓					CERAMIC TILE WALLS, FLOOR TO CEILING
210	WOMENS TOILET	✓									✓					✓							✓	8'-2¾"	✓					CERAMIC TILE WALLS, FLOOR TO CEILING
211	CAT WALK AREA																			✓							✓			
212	MECHANICAL ROOM			✓							✓				✓					✓							✓			
213	LGT. CONT. PLATFORM			✓																							✓			
214	LGT. CONT. EQUIP. RM			✓							✓				✓					✓				8'-0"				✓		

NOTES ADDED.

NOTES ADDED.

DOOR SCHEDULE

Number	Type	Door Material: Aluminum	Door Material: Wood	Door Material: Hollow Metal	Door Material: See Remarks	Opng. Size: Width	Opng. Size: Height	Threshold: Thickness	Threshold: Metal	Threshold: Marble	Threshold: See Remarks	Hardware Set No.	Buck Type	Remarks
1	J			✓		3'0"	7'0"	1¾"				21	15	
2	J			✓		3'0"	7'0"	1¾"				21	15	
3	J			✓	✓	3'0"	7'0"	1¾"				22	18	"A" LABEL
4	J			✓		3'0"	5'10"	1¾"				23	15	
5	D			✓		3'0"	5'10"	1¾"				23	15	
101	A	✓			✓	3'0"	7'0"	1¾"	✓			19	3	SEE DETAIL (3/A)
102	B		✓			3'0"	7'0"	1¾"				16	2	
103	B		✓			2'0"	7'0"	1¾"				17	2	
104	F		✓			2'4"	7'0"	1¾"				18	14	
105	F		✓			2'4"	7'0"	1¾"				18	14	
106	B		✓			3'0"	7'0"	1¾"				16	2	
107	B		✓			2'0"	7'0"	1¾"				17	2	
108	B		✓			2'0"	7'0"	1¾"				17	2	
109	B		✓			3'0"	7'0"	1¾"				16	2	
110	F		✓			2'4"	7'0"	1¾"				18	14	
111	F		✓			2'4"	7'0"	1¾"				18	14	
112	B		✓			3'0"	7'0"	1¾"				16	2	
113	B		✓			2'0"	7'0"	1¾"				17	2	
114	C		✓			2'0"	7'0"	1¾"		✓		17	14	
115	H		✓		✓	2'0"	7'0"	1¾"				17	2	TELEPHONE BOOTH
116	B		✓			2'0"	7'0"	1¾"				17	2	
117	B		✓			3'0"	7'0"	1¾"				16	2	
118	F		✓			2'4"	7'0"	1¾"				18	14	
119	J			✓	✓	5'0"	7'2"	1¾"				15	16	
120	A	✓				6'0"	7'2"	1¾"	✓			14	4	
121	J			✓	✓	2'8"	7'3"	1¾"				10	5	
122	F		✓			3'0"	7'3"	1¾"				9	5	
123	C		✓			2'0"	7'2"	1¾"		✓		9	5	
124	J			✓	✓	3'0"	7'3"	1¾"				13	18	
125	J			✓	✓	3'0"	7'3"	1¾"				13	18	
126	A	✓				5'4"	7'3"	1¾"	✓			✓ 2	12	
127	A	✓				5'4"	7'3"	1¾"	✓			✓ 2	12	
128	A	✓				5'4"	7'3"	1¾"	✓			✓ 2	12	
129	A	✓				5'4"	7'3"	1¾"	✓			✓ 2	12	
130	D		✓			5'4"	7'3"	1¾"				4	6	
131	D		✓			5'4"	7'3"	1¾"				4	6	
132	D		✓			5'4"	7'3"	1¾"				4	6	
133	D		✓			5'4"	7'3"	1¾"				4	6	
134	A	✓				5'4"	7'0"	1¾"	✓		✓	1	3	
135	A	✓				5'4"	7'0"	1¾"	✓		✓	1	1	
136	A	✓				5'4"	7'0"	1¾"	✓		✓	1	3	
137	A	✓				5'4"	7'0"	1¾"	✓		✓	1	3	
138	G		✓		✓	3'0"	7'0½"	1¾"	✓			11	13	
139	F		✓			3'0"	7'0½"	1¾"	✓			9	13	
140	D		✓			3'0"	7'0"	1¾"				10	2	
141	D		✓			2'4½"	7'0"	1¾"				9	10	
142	D		✓		✓	6'0"	7'0"	1¾"				6	2	
143	F		✓			3'0"	7'0"	1¾"		✓		8	9	
144	F		✓			3'0"	7'0"	1¾"				8	11	
145	D		✓			2'0"	6'0"	1¾"				12	5	
146	C		✓			3'0"	7'0"	1¾"				9	14	
147	F		✓			3'0"	7'0"	1¾"				8	9	
148	F		✓			3'0"	7'0"	1¾"	✓			7	2	
149	D		✓		✓	6'0"	7'0"	1¾"				6	2	
150	A	✓				4'0"	7'0"	1¾"	✓			3	4	
151	F		✓			3'0"	7'0"	1¾"	✓			7	2	
152	A	✓				3'0"	7'0"	1¾"	✓		✓	3	3	SEE DETAIL (3/A)
153	A	✓				3'0½"	7'0"	1¾"	✓		✓	3	3	
154	E		✓			4'0"	7'0"	1¾"			✓	5	11	SEE DETAIL (1/A)
155	B		✓			1'-3"	1'-11"	1¾"				24		SEE DETAIL (5/A) FOR BUCK TYPE
201	D		✓			2'0"	7'0"	1¾"				9	10	
202	C		✓			2'0"	7'0"	1¾"		✓		9	14	
203	J			✓	✓	3'0"	7'3"	1¾"				20	18	
204	F		✓			2'0"	7'3"	1¾"				9	5	
205	F		✓			2'0"	7'3"	1¾"				18	5	
206	D		✓			3'0"	7'3"	1¾"				9	5	
207	J			✓	✓	3'0"	7'3"	1¾"				20	18	
208	F		✓			3'0"	7'0"	1¾"		✓		8	7	
209	F		✓			3'0"	7'0"	1¾"		✓		8	7	
210	D		✓			2'0"	7'3"	1¾"				12	5	
211	D		✓		✓	3'0"	7'3"	1¾"				9	5	
212	J			✓		2'0"	5'3"	1¾"				9	15	ACCESS TO PLATFORMS

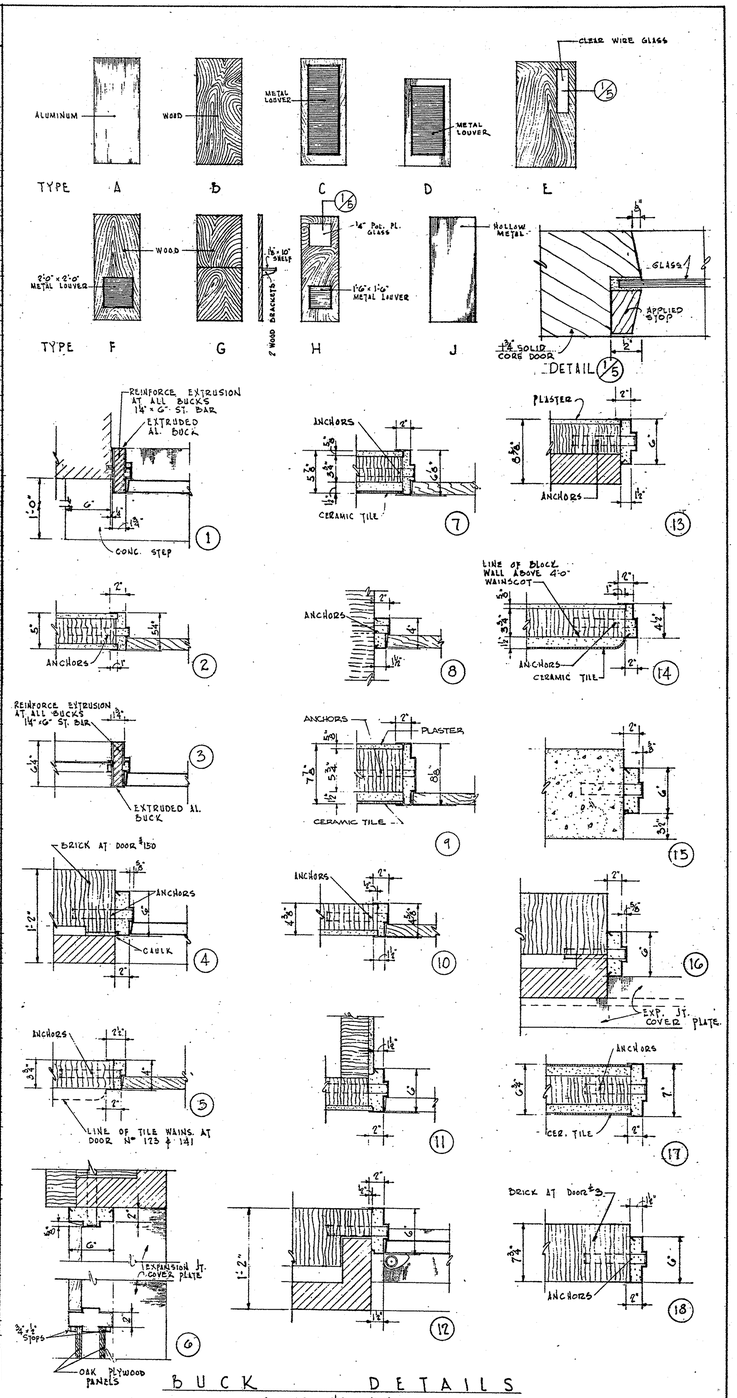

BUCK DETAILS

SCALE 1½" = 1'-0"

NOTE! FILL ALL BUCKS WITH MORTAR

ALL DIMENSIONS AND EXISTING CONDITIONS SHALL BE CHECKED AND VERIFIED BY THE CONTRACTOR AT THE SITE.

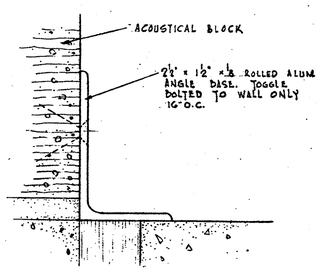

F. S. ALUMINUM BASE DETAIL

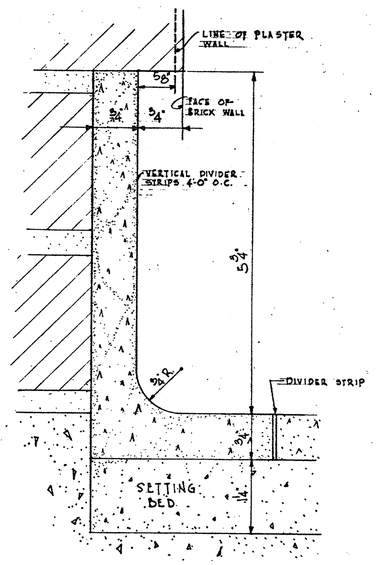

F. S. TERRAZZO BASE DETAIL

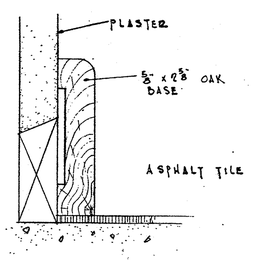

F. S. WOOD BASE DETAIL

APPROVED
Commonwealth of Pennsylvania
Department of Welfare
Registered Architect Date 1-12-55
Secretary Date

APPROVED
Comm. of Penna.
Dept. of Labor and Industry
Bureau of Inspection
Buildings Division
Date 1-12-55 File S.T. 265
Approved by
Checked by

REVISED
1 AS BUILT JAN. 29, 1957.

ARCHITECT
ENGINEER
INSTITUTION
SUPERVISING ARCHITECT GSA

CHECKED BY THE GENERAL STATE AUTHORITY

ARCH.	STRUCT.	HEAT.	PLUMB.	ELECT.
R.H.B. 2-14-55				
ELEVATORS	KITCH. EQ.	L'DRY. EQ.	HOSP. EQ.	MISC.

PROJECT No GSA—510-12

PHILA. STATE HOSPITAL
PHILADELPHIA PENNSYLVANIA

CHAPEL & AUDITORIUM BUILDING
ROOM FINISH SCHEDULE
DOOR SCHEDULE & DETAILS

NOLEN & SWINBURNE — REGISTERED ARCHITECTS
1649 NO. BROAD STREET PHILADELPHIA, PA.

DATE: 7-JAN-1955
SCALE: AS NOTED
THE GENERAL STATE AUTHORITY
JOHN N. FORKER - EXECUTIVE DIRECTOR
HARRISBURG, PENNSYLVANIA
DWG. No A-5