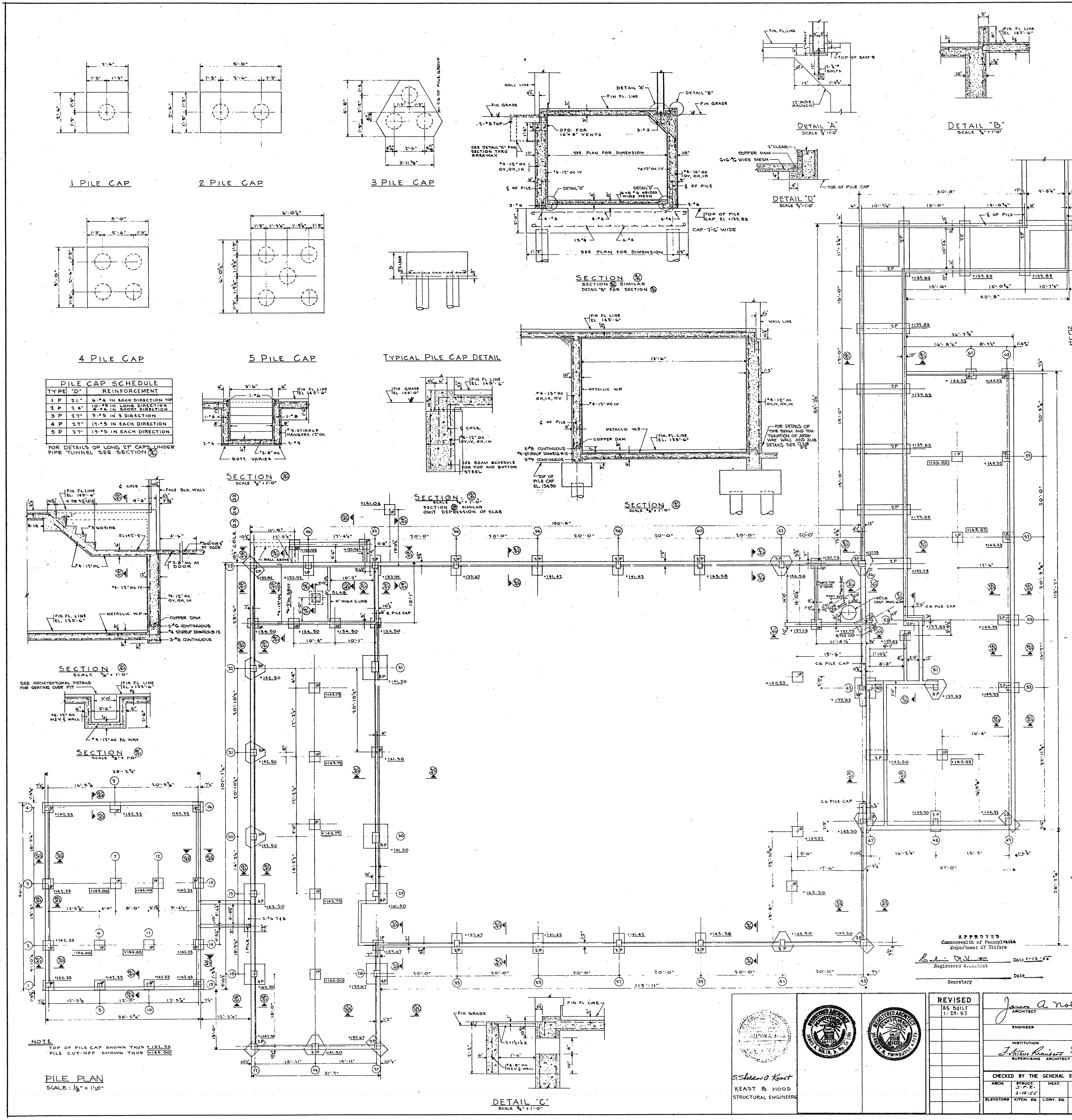

1 PILE CAP

2 PILE CAP

3 PILE CAP

4 PILE CAP

5 PILE CAP

TYPICAL PILE CAP DETAIL

SECTION 8/S1
SECTION 9/S1 SIMILAR
DETAIL "B" FOR SECTION 9/S1

DETAIL "A"
SCALE 3/4" = 1'-0"

DETAIL "D"
SCALE 3/4" = 1'-0"

DETAIL "B"
SCALE 3/4" = 1'-0"

PILE CAP SCHEDULE		
TYPE	"D"	REINFORCEMENT
1 P	21"	6-#4 IN EACH DIRECTION TOP
2 P	24"	10-#5 IN LONG DIRECTION 8-#4 IN SHORT DIRECTION
3 P	27"	9-#5 IN 3 DIRECTION
4 P	27"	17-#5 IN EACH DIRECTION
5 P	27"	19-#5 IN EACH DIRECTION

FOR DETAILS OF LONG 2P CAPS UNDER PIPE TUNNEL SEE SECTION 8/S1

SECTION 12/S1
SCALE 3/8" = 1'-0"

SECTION 13/S1
SCALE 3/4" = 1'-0"
SECTION 13A SIMILAR
OMIT DEPRESSION OF SLAB

SECTION 14/S1
SCALE 3/8" = 1'-0"

SECTION 11/S1
SCALE 3/8" = 1'-0"

SECTION 20/S1
SCALE 3/8" = 1'-0"

NOTE
TOP OF PILE CAP SHOWN THUS +142.33
PILE CUT-OFF SHOWN THUS [144.00]

PILE PLAN
SCALE: 1/8" = 1'-0"

DETAIL "C"
SCALE 3/4" = 1'-0"

NOTE :- CONTRACTOR SHOULD LOCATE EXISTING DRAINAGE LINES BEFORE PILES ARE DRIVEN.

2'-6"
1'-3"
5'-0"
2'-6"
4'-8"
3'-11 3/8"
CG OF PILE GROUP
6'-0 1/2"
1'-9 1/4"
D
3" CLEAR
WALL LINE
FIN GRADE
FIN. FL. LINE
DETAIL "A"
DETAIL "B"
2-#5 TOP
OPG. FOR 16" x 8" VENTS
SEE DETAIL "C" FOR SECTION THRU AREAWAY
SEE PLAN FOR DIMENSION
#4-12" OC OV, OH, IH
#4-12" OC IV
#4-14" OC OV, OH, IH
¢ OF PILE
DETAIL "D"
6x6-#6 WELDED WIRE MESH
TOP OF PILE CAP EL +139.83
CAP-2'-6" WIDE
13-#4
6-#4
FIN. FL. LINE
1" GROUT
TOP OF BASE ℞
2-3/4" ⌀ BOLTS
12" WIDE HAUNCH
2" CLEAR
COPPER DAM
6x6-#6 WIRE MESH
TOP OF PILE CAP
FIN FL LINE EL 147'-6"
FIN FL LINE EL 145'-6"
FIN GRADE EL 145'-0"
¢ COLS.
#4-12" OC OV, IV, OH, IH
SEE BEAM SCHEDULE FOR TOP AND BOTTOM STEEL
#3-STIRRUP HANGERS 12" OC
#3-8" OC
BOTT. VARIES
METALLIC W.P.
FIN. FL. LINE EL. 135'-6"
2-#8 CONTINUOUS
#4-STIRRUP DOWELS @ 12
2-#9 CONTINUOUS
TOP OF PILE CAP EL. 134.50
FOR DETAILS OF THIS BEAM AND CONTINUATION OF AREA-WAY WALL AND SLAB DETAILS SEE 17+18/S2
WALL LINE
FACE BLK. WALL
FIN. FL. LINE EL. 145'-6"
4 T @ 9 1/2"=3'-2"
#3 NOSING
EL 142'-2"
#3 x 10'-0" @ 8" AT DOOR
#3-8" OC AT DOOR
#4-12" OC
#4-12" OC IV
COPPER DAM
2-#6 CONTINUOUS
#4 STIRRUP DOWELS @ 12
3-#8 CONTINUOUS
SEE ARCHITECTURAL DETAILS FOR GRATING OVER PIT
FIN FL LINE EL + 135'-6"
#4-12" OC H & V ¢ WALL
#4-12" OC EA. WAY
150'-6"
20'-0"
119'-11"
101'-1 1/2"
38'-2 3/4"
31'-7"
84'-3 1/2"
40'-8"
113'-7"
37'-0"
10 1/2" COLS. 23 26 32
WALL ABOVE
6" SLAB
4" HIGH CURB
¢ PILE CAP
CG PILE CAP
47" I.D. CAST IRON SUMP
1 PILE
2-#6 T & B
1P
2P
3P
4P
5P
+142.33
+142.50
+141.50
+143.79
+139.67
+133.92
+134.50
+141.42
+143.58
+144.50
+137.75
+139.83
+144.33
+145.83
+143.50
+145.50
+141.04
144.00
146.00
145.87
145.83
FIN GRADE
FIN FL LINE
2 x 1 1/2 x 1/4 ∠
#4-8" OC H & V ¢ WALL
1
2
3
4
5
6
7
9
10
11
12
13
14
15
16
17
18
19
20
21
22
23
24
26
27
28
29
30
31
32
33
34
35
36
37
38
39
40
41
42
43
45
46
47
48
49
50
51
52
53
55
57
59
61
62

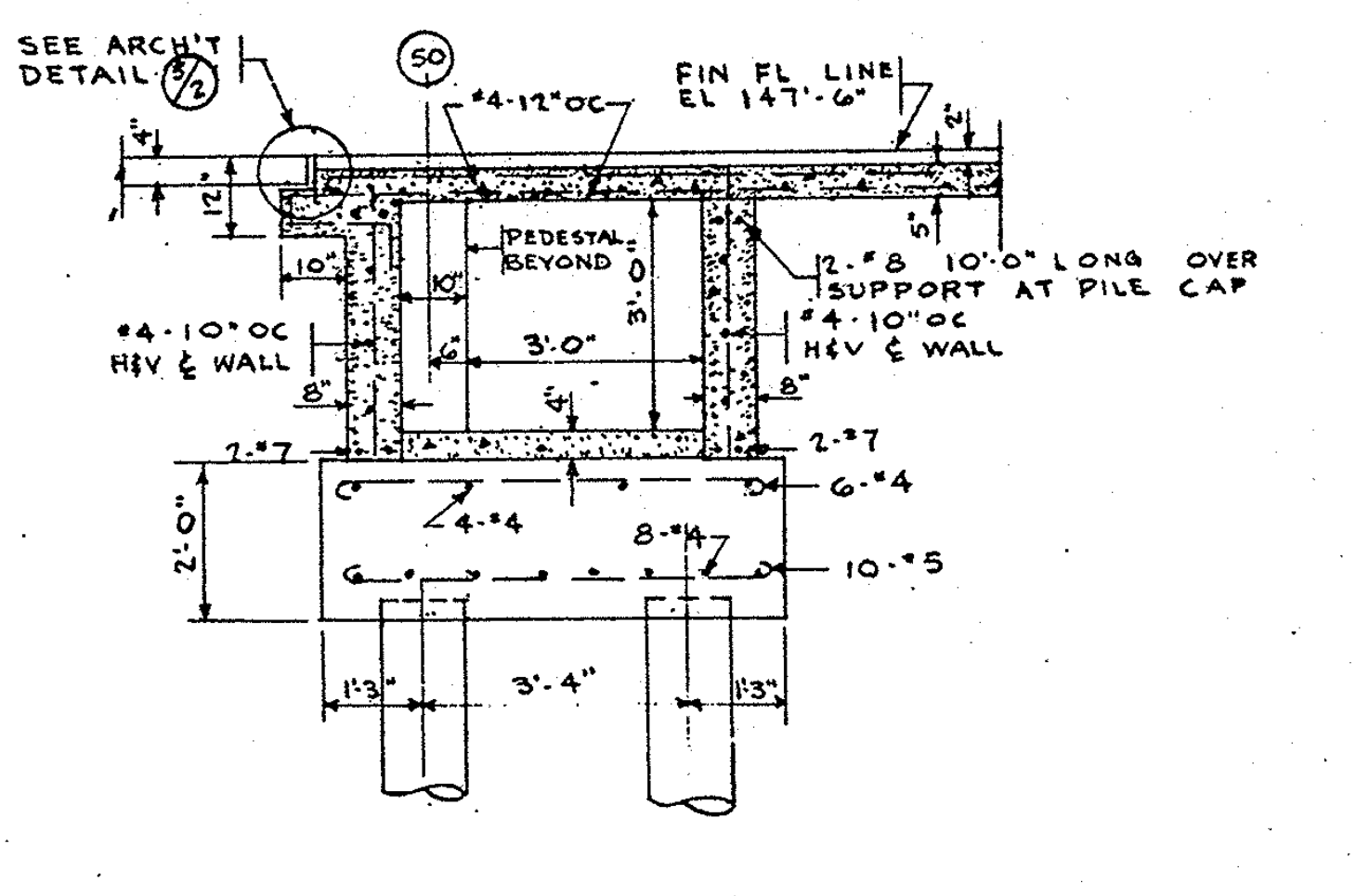

SECTION 19/S1
SCALE 3/8" = 1'-0"

SEE ARCH'T DETAIL 3/2
50
#4-12" OC
FIN FL LINE EL 147'-6"
PEDESTAL BEYOND
2-#8 10'-0" LONG OVER SUPPORT AT PILE CAP
#4-10" OC H & V ¢ WALL
3'-0"
2-#7
6-#4
4-#4
8-#4
10-#5
2'-0"
1'-3"
3'-4"

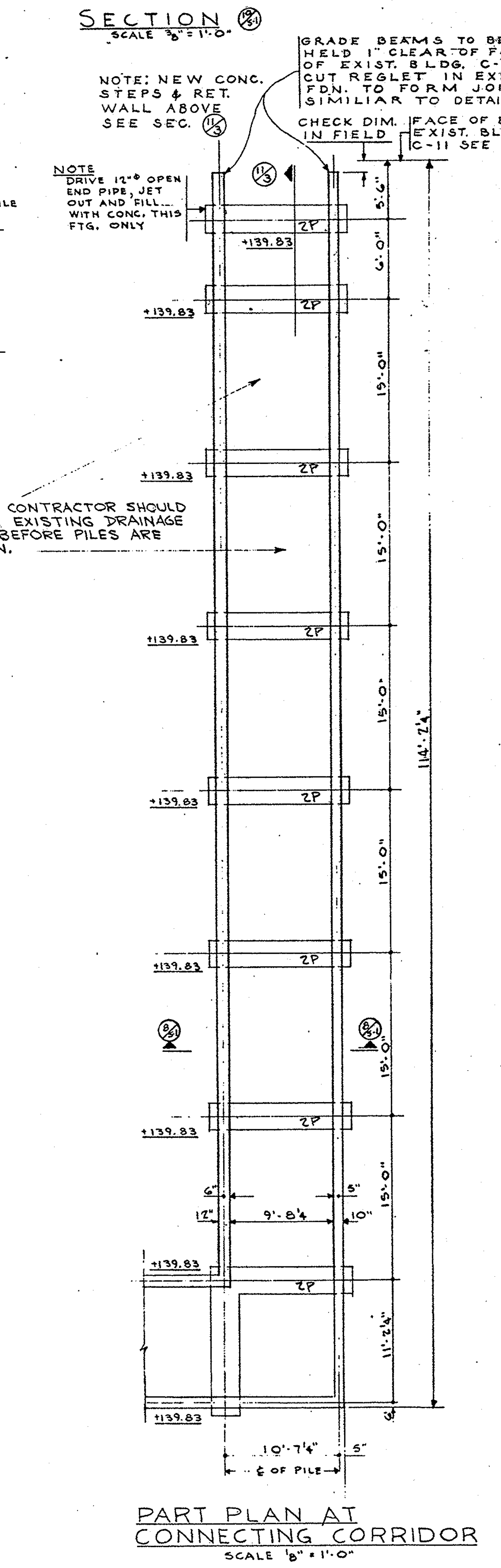

NOTE: NEW CONC. STEPS & RET. WALL ABOVE SEE SEC. 11/3

GRADE BEAMS TO BE HELD 1" CLEAR OF FDN. OF EXIST. BLDG. C-11. CUT REGLET IN EXIST. FDN. TO FORM JOINT SIMILIAR TO DETAIL 1/3

CHECK DIM. IN FIELD

FACE OF BR. EXIST. BLDG. C-11 SEE DET. 2/3

NOTE
DRIVE 12" ⌀ OPEN END PIPE, JET OUT AND FILL WITH CONC. THIS FTG. ONLY

PART PLAN AT CONNECTING CORRIDOR
SCALE 1/8" = 1'-0"

2P
+139.83
5'-6"
6'-0"
15'-0"
114'-2 1/4"
11'-2 1/4"
9'-8 1/4"
10'-7 1/4"
¢ OF PILE
6"
12"
5"
10"
8/S1

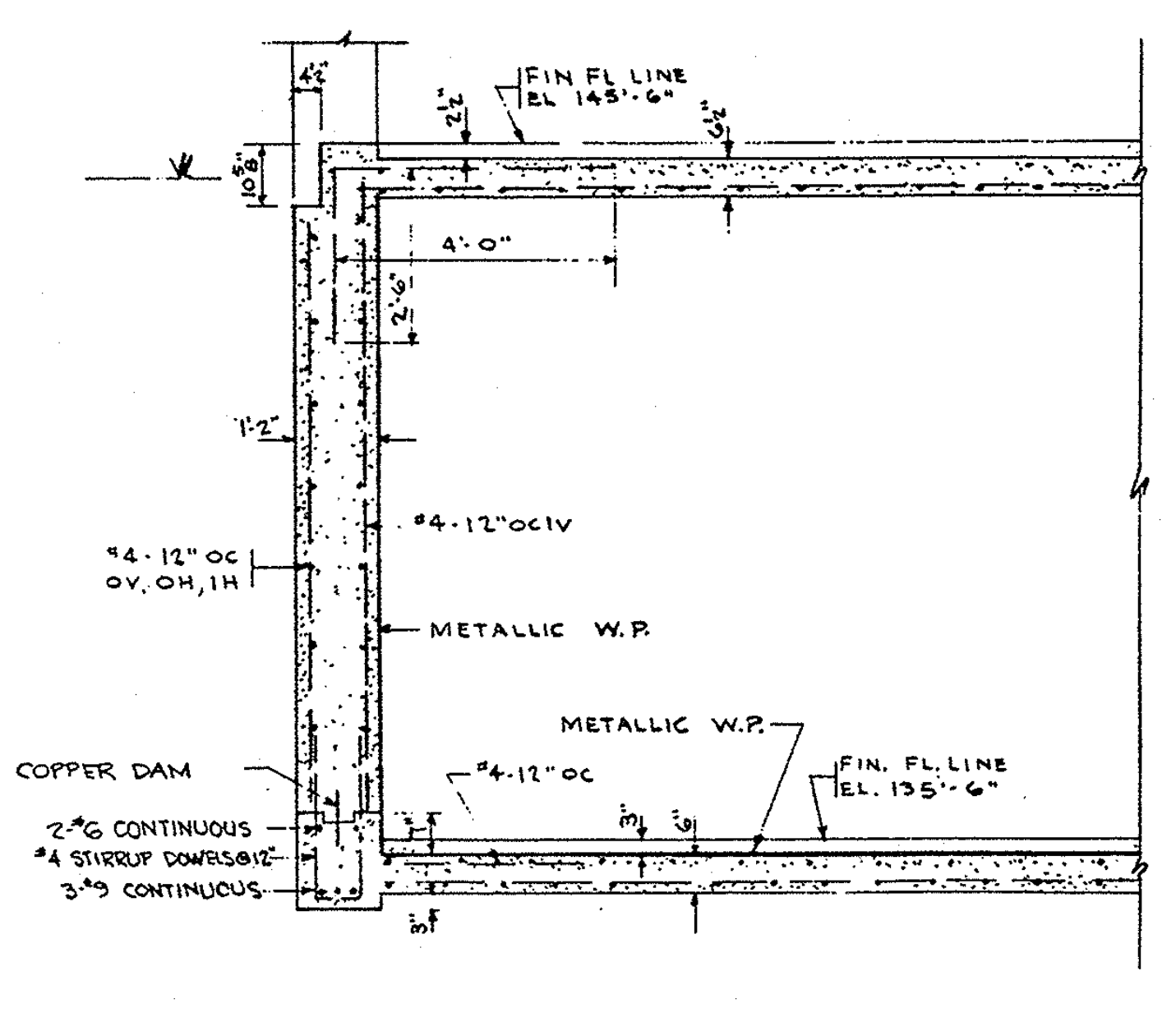

SECTION 15/S1
SCALE 3/8" = 1'-0"

FIN FL LINE EL 145'-6"
4'-0"
#4-12" OC IV
#4-12" OC OV, OH, IH
METALLIC W.P.
COPPER DAM
#4-12" OC
FIN. FL. LINE EL. 135'-6"
2-#6 CONTINUOUS
#4 STIRRUP DOWELS @ 12"
3-#9 CONTINUOUS

APPROVED
Commonwealth of Pennsylvania
Department of Welfare

Calvin R. Whit[illegible] Date 1-12-55
Registered Architect

Date____
Secretary

S. Sheldon A. Keast
KEAST & HOOD
STRUCTURAL ENGINEERS

JAMES A. NOLEN, Jr. No. CX 1784

HERBERT H. SWINBURNE A-2113

REVISED
AS BUILT 1-29-57

James A. Nolen Jr.
ARCHITECT

ENGINEER

INSTITUTION

F. Arthur [illegible] 7/23/55
SUPERVISING ARCHITECT GSA

CHECKED BY THE GENERAL STATE AUTHORITY				
ARCH.	STRUCT.	HEAT.	PLUMB.	ELECT.
	J.F.R. 2-14-55			
ELEVATORS	KITCH. EQ.	L'DRY. EQ.	HOSP. EQ.	MISC.

PROJECT No GSA—510-12

PHILA. STATE HOSPITAL
PHILADELPHIA PENNSYLVANIA

CHAPEL & AUDITORIUM BUILDING
PILE PLAN &
FOUNDATION DETAILS
NOLEN & SWINBURNE — REGISTERED ARCHITECTS
1649 NO. BROAD STREET PHILADELPHIA, PA.

DATE: 7 JAN. 1955
SCALE: AS NOTED
THE GENERAL STATE AUTHORITY
JOHN N. FORKER - EXECUTIVE DIRECTOR
HARRISBURG, PENNSYLVANIA
DWG. No S 1